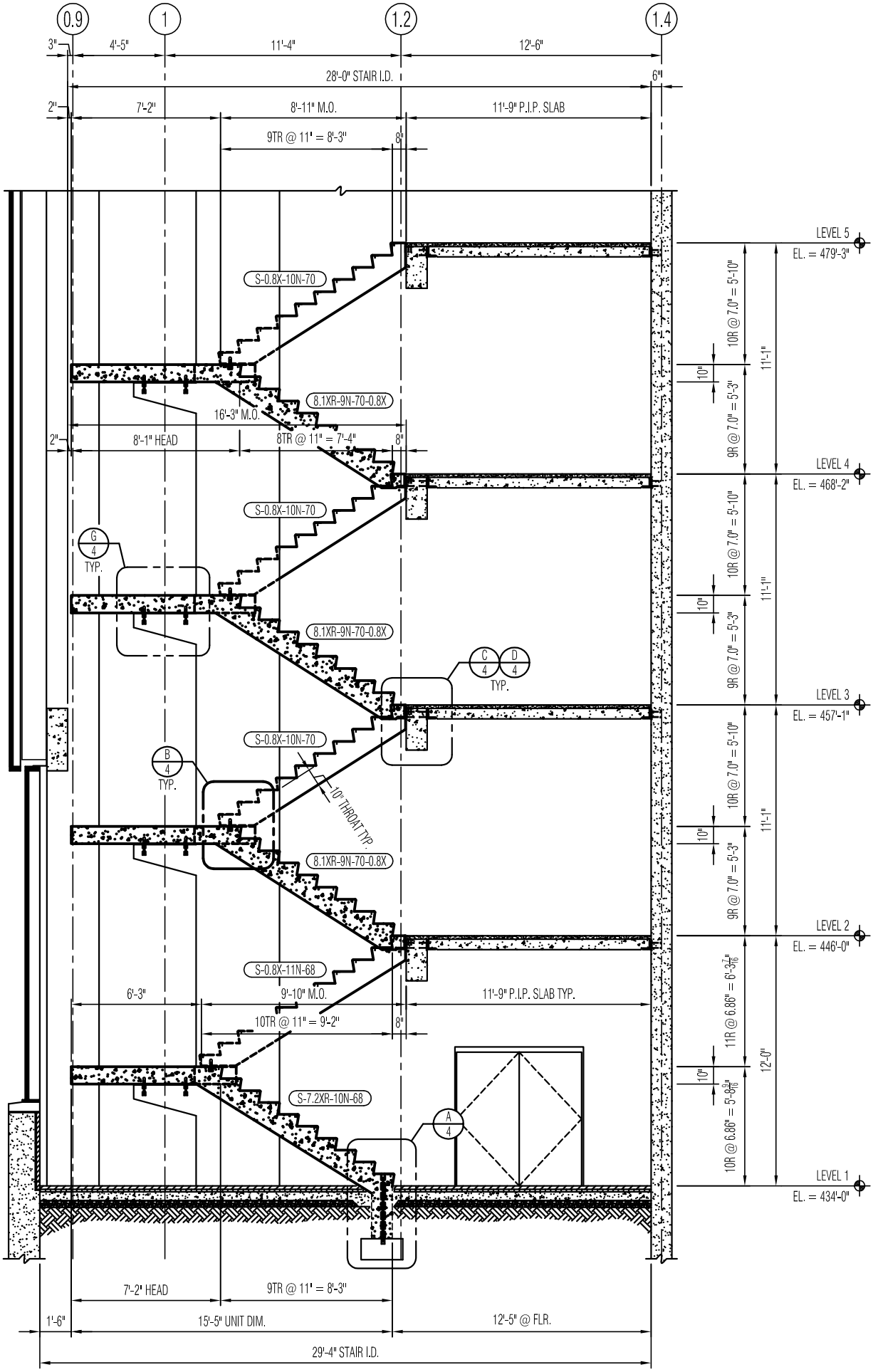

A STAIR #1 - SECTION

1/4" = 1'-0"

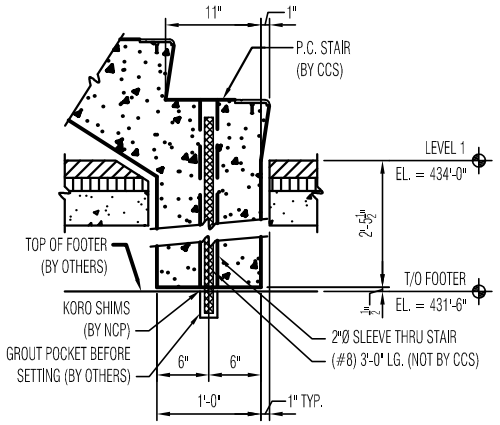

A FOOT DETAIL - STARTER UNIT

1" = 1'-0"

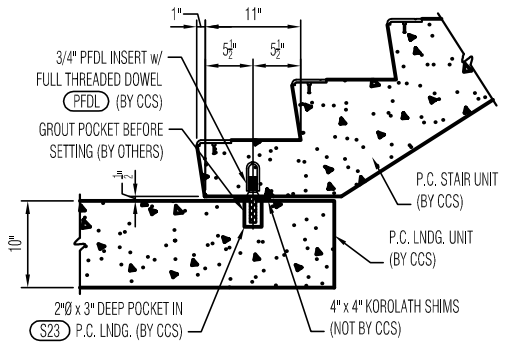

B FOOT DETAIL - STARTER UNIT

1" = 1'-0"

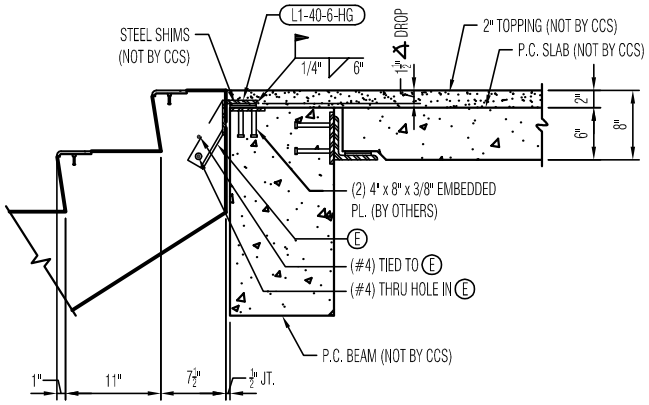

C CONNECTION & BRG. DETAIL @ HEAD

1" = 1'-0"

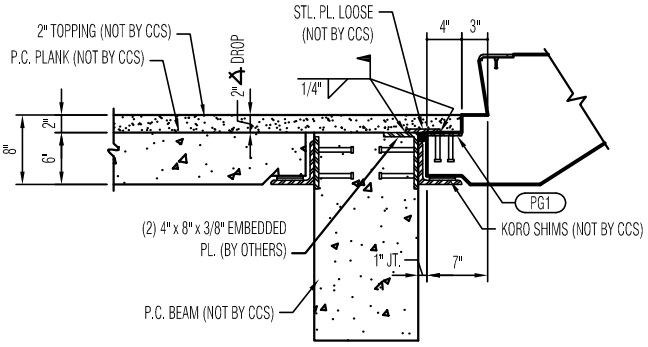

D CONNECTION & BRG. DETAIL @ FOOT

1" = 1'-0"

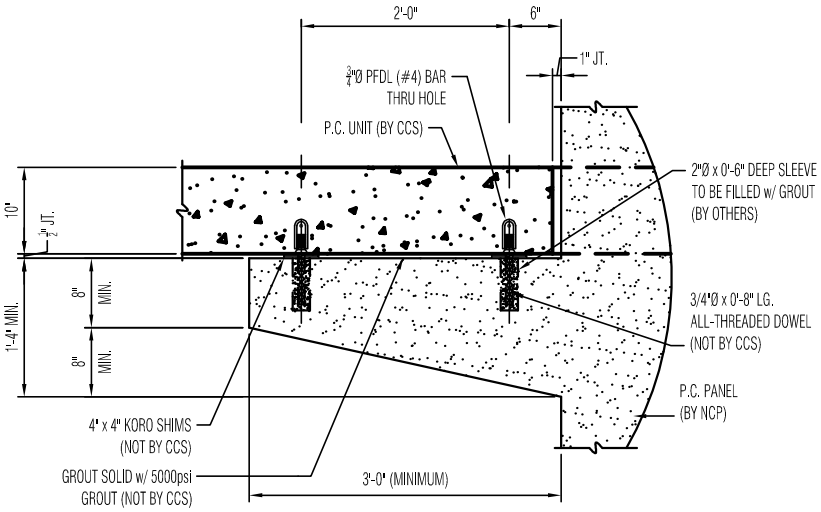

G CONNECTION @ HAUNCH

1" = 1'-0"